Name:_____Number:_____Period:_____Date:_____

Unit 11 Study Guide

Transformations

Use for 1 & 2: On the graph at right, plot, label, and connect in order the following points and connect D to A:

$A(-6,6)$ $B(-1,6)$ $C(-1,4)$ $D(-6,4)$

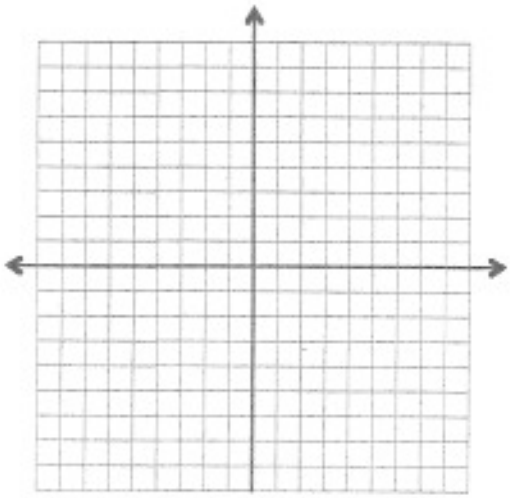

1.)Reflect figure ABCD across the x-axis, translate it 5 units right and 3 units up. Label the new figure A'B'C'D'

2.)Are figure ABCD and figure A'B'C'D' similar and/or congruent? Explain completely, Justifying your answer.

Use for 3 & 4: On the graph at right, plot, label, and connect in order the following points and connect J to E:

$E(-8,8)$ $F(-3,7)$ $G(-1,8)$ $H(-2,2)$ $J(-6,3)$

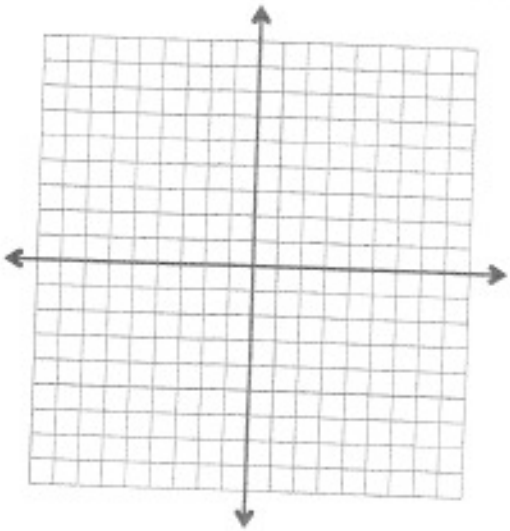

3.)Multiply each coordinate of figure EFGHJ by $-\frac{1}{2}$, Reflect across the y-axis. Label the new figure E'F'G'H'J'

4.)Is figure E'F'G'H'J' similar and/or congruent to the original figure EFGHJ? Explain why or why not, being clear and complete.

Use for 5 & 6: On the graph at right, plot, label, and connect in order the following points and connect C to A:

$A(1,1)$ $B(6,1)$ $C(4,4)$

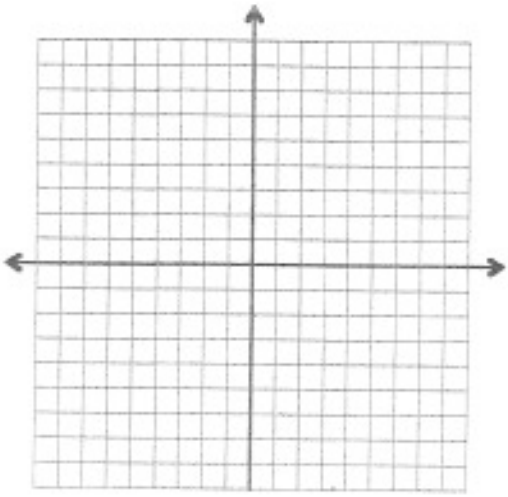

5.)Reflect figure ABC across the line $y = -2$, rotate it $90°$ counter clockwise about $(-2,-3)$. Label the new figure A'B'C'.

6.)Are figure ABC and figure A'B'C' similar and/or congruent? Explain completely, Justifying your answer.

Use for 7 & 8: On the graph at right, plot, label, and connect in order the following points and connect H to F:

$F(-1,-1)$ $G(0,-4)$ $H(-6,-5)$

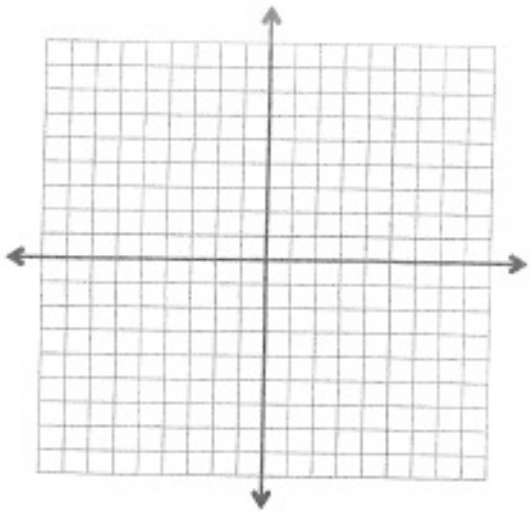

7.)Multiply each coordinate of figure FGH by -1, rotate it $90°$ clockwise about the origin. Label the new figure F'G'H'.

8.)Is figure F'G'H' similar and/or congruent to the original figure FGH? Explain why or why not, being clear and complete.

Similar Figures

For 9 & 10, the 2 figures are similar. Solve for both x and y. Show all work!

9.)

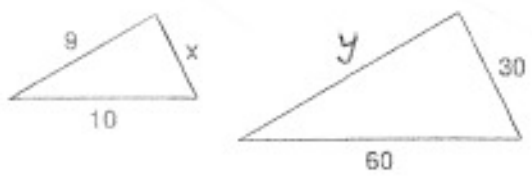

10.)

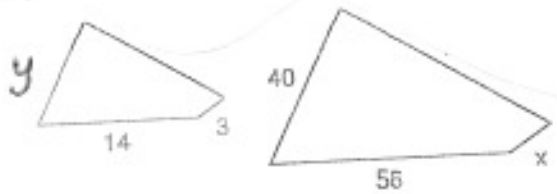

11.) solve for x: $\frac{x}{5} = \frac{4}{30}$

12.) solve for x: $\frac{x}{3.5} = \frac{4}{8}$

13.) Solve for x: $\frac{4x}{5} + \frac{3}{2} = \frac{3x+5}{4}$

14.) Solve for x: $\frac{x}{2} + \frac{3}{4} = \frac{2x+1}{4}$

15.) Solve for a: $u = 3b - 2a + 2$

16.) Solve for a: $-3a - 3 = -2n + 3p$

17.) Graph: $y = -\frac{3}{2}x - 4$

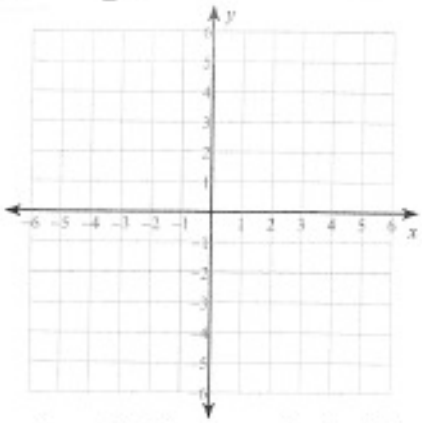

18.) Graph: $y = \frac{3}{5}x + 1$

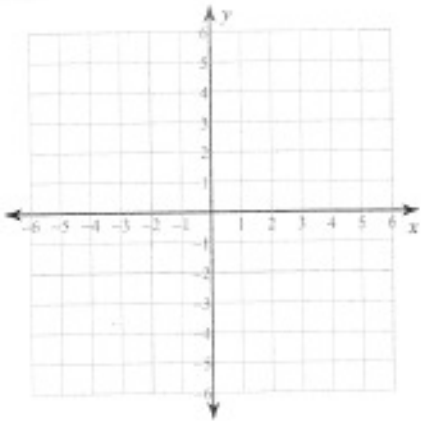

Volume

19.) Find the volume inside the cylinder but outside the sphere.

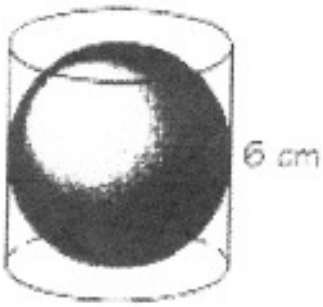

20.) Find the volume

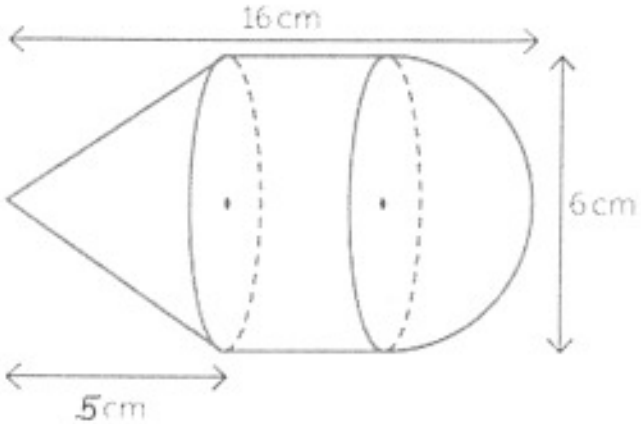

Find the volume and the surface area for 21 & 22

21.)

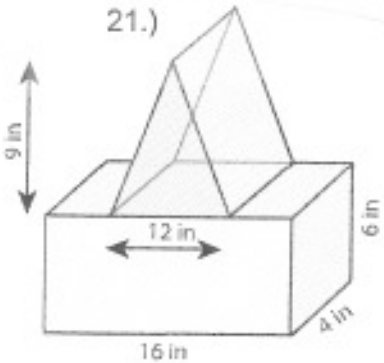

22.)