Name: Key Number:_____ Period:_____ Date:_____

Unit 10 Study Guide

Area & Perimeter

Find the area and perimeter of each shape below. Use the π button on your calculator. Round your answer to the nearest hundredths place.

1.)

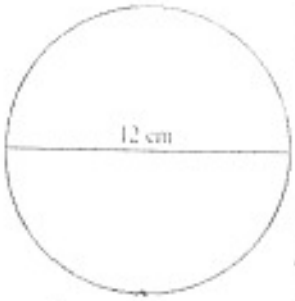

$C = \pi d$
$C = \pi 12$
$C = 37.6991$
$A = \pi r^2$
$A = \pi 6^2$
$A = \pi 36$
$A = 113.0973$

C= 37.70 cm
A= 113.10 cm^2

2.)

$C = \pi d$
$A = \pi r^2$

15 in. $A = L \cdot W$

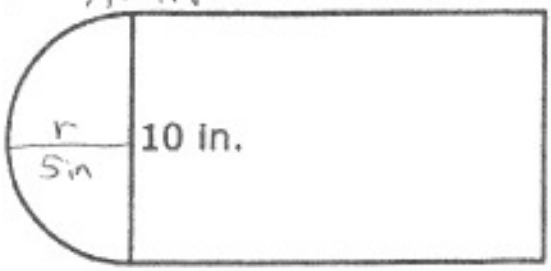

P= 55.71 in.
A= 189.27 in^2

$P = 15 + 10 + 15 + \frac{1}{2}\pi 10$
$P = 40 + 15.70796$

$A = 15 \cdot 10 + \frac{1}{2}\pi 5^2$
$A = 150 + 39.2699$

Volume: Composite, cylinders, sphere, prisms

For each find the volume. Find the surface area of 3. Use the π button on your calculator. Round your answer to the nearest hundredths place.

3.)

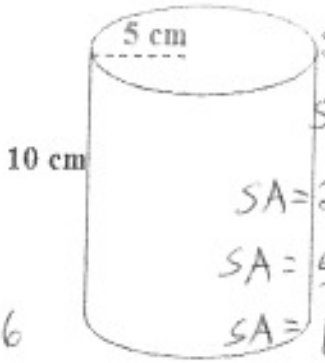

$V = \pi r^2 \cdot h$
$V = \pi 5^2 \cdot 10$
$V = \pi 250$
$V = 785.39816$

$SA = 2\pi r^2 + C \cdot h$
$SA = 2 \cdot \pi r^2 + \pi d \cdot h$
$SA = 2\pi 5^2 + \pi 10 \cdot 10$
$SA = 50\pi + 100\pi$
$SA = 150\pi$
$SA = 471.238898$

Surface Area= 471.24 cm^2
Volume= 785.40 cm^3

4.)

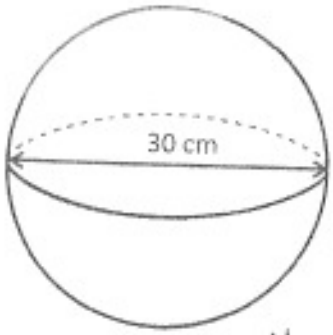

$V = \frac{4}{3}\pi r^3$
$V = \frac{4}{3}\pi 15^3$
$V = \frac{4}{3}\pi 3{,}375$
$V = 4500\pi$

Volume= 14,137.17 cm^3

$V = \frac{1}{2} V_{cylinder} + V_{prism}$

$V = \frac{1}{2}\pi r^2 h + A_{base} \cdot h$

5.) $V = \frac{1}{2}\pi 3^2 \cdot 10 + 6 \cdot 6 \cdot 10$

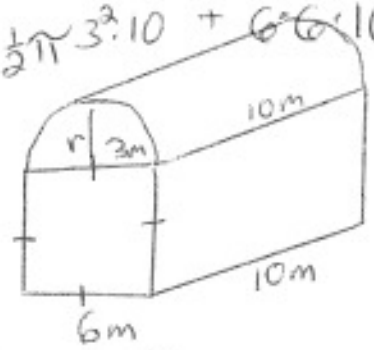

$V = 45\pi + 360$

Volume= $501.37 m^3$

$V = V_{cone} + \frac{1}{2} V_{sphere}$

$V = \frac{1}{3}\pi r^2 \cdot h + \frac{1}{2}\left(\frac{4}{3}\pi r^3\right)$

6.)

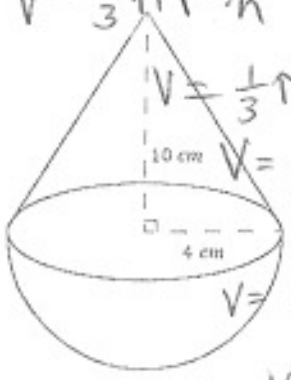

$V = \frac{1}{3}\pi 4^2 \cdot 10 + \frac{2}{3}\pi 4^3$

$V = \frac{1}{3}\pi 160 + \frac{2}{3}\pi 64$

$V = \frac{160}{3}\pi + \frac{128}{3}\pi$

$V = 96\pi$

Volume= $301.59 cm^3$

Review: Equations, Order of Operations, Proportional Reasoning, Real number system

7.) -2 is which of the following:

a) Natural b) Whole c) Integer d) Rational e) Irrational f) Real

8.) $-\frac{2}{3}$ is which of the following:

a) Natural b) Whole c) Integer d) Rational e) Irrational f) Real

9.) 5 is which of the following:

a) Natural b) Whole c) Integer d) Rational e) Irrational f) Real

10.) 0 is which of the following:

a) Natural b) Whole c) Integer d) Rational e) Irrational f) Real

11.) 5.32 is which of the following:

a) Natural b) Whole c) Integer d) Rational e) Irrational f) Real

12.) $\sqrt{3}$ is which of the following:

a) Natural b) Whole c) Integer d) Rational e) Irrational f) Real

13.) solve for x: $\left[\frac{x}{5} = \frac{4}{30}\right]^{30}$

$\frac{30x}{5} = 4$

$\frac{6x}{6} = \frac{4}{6}$ $\quad x = \frac{4}{6}$

$\boxed{x = \frac{2}{3}}$

14.) solve for x: $\frac{x}{3.5} = \frac{4}{8}$

$\frac{8x}{8} = \frac{14}{8}$

$x = \frac{14}{8}$

$\boxed{x = \frac{7}{4} \text{ or } 1\frac{3}{4}}$

15.) Simplify: $-6^2 \div \left(\frac{1}{3}\right)^2 - 2(2+1)$

$-36 \div \frac{1}{9} - 2 \cdot 3$

$-324 - 6$

$\boxed{-330}$

16.) Solve for x: $\left(\frac{4x}{5} + \frac{3}{2} = \frac{3x+5}{4}\right)^{20}$

$\frac{20 \cdot 4x}{5} + \frac{20 \cdot 3}{2} = \frac{20(3x+5)}{4}$

$16x + 30 = 15x + 25$

$-15x \quad -30 \quad -15x \quad -30$

$\boxed{x = -5}$

17.) Solve for x: $\left(\frac{x}{2} + \frac{3}{4} = \frac{2x+1}{4}\right)^{4}$

$\frac{4 \cdot x}{2} + \frac{4 \cdot 3}{4} = \frac{4(2x+1)}{4}$

$2x + 3 = 2x + 1$

$-2x \quad -2x$

$3 \neq 1$

$\boxed{\text{No solution}}$

18.) Simplify: $-5 - |-2 \cdot 4 + (-5)|$

$-5 - |-8 + -5|$

$-5 - |-13|$

$-5 - 13$

$\boxed{-18}$

19.) Simplify: $-|2 - (-6)| - |-2 \cdot 4 - 5|$

$-|8| - |-8 - 5|$

$-8 - |-13|$

$-8 - 13$

$\boxed{-21}$

20.) If 18 apples cost \$4.68, compute cost per apple.

$\frac{\$4.68}{18} = \boxed{\$0.26 \text{ each}}$

21.) If 23 pears cost \$23.92, compute cost per pear.

$\frac{\$23.92}{23} = \boxed{\$1.04 \text{ per pear}}$

22.) Graph: $y = -\frac{2}{3}x + 4$

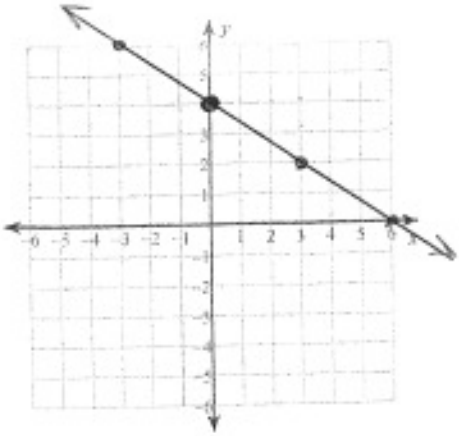

23.) Graph: $y = \frac{1}{5}x - 2$

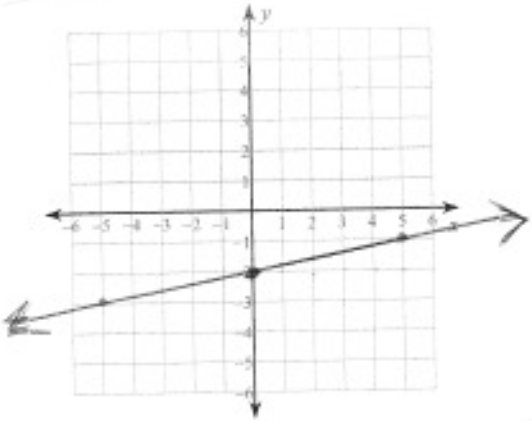

24.) Graph: $y = \frac{2}{5}x + 1$

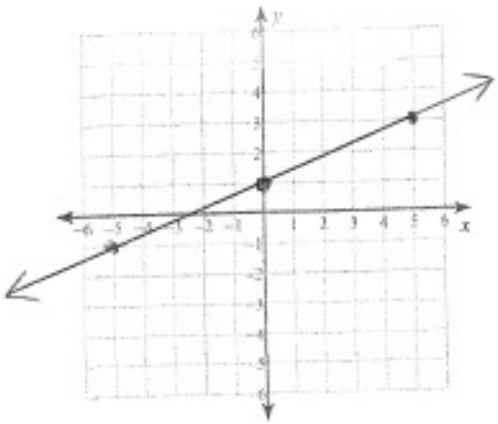

25.) Graph: $y = -\frac{2}{3}x - 2$